Hackstarter Logbook

Logbook for [Hackstarter 2026 (with ChangeBio)]() 2026-01-27
By Povilas Sauciuvienas

2026-01-27

Testing

Walls and channels

- Prints of only walls or only channels on rectangular plate were tested.
- Thinning 2 to 0 mm feature over 50 mm was printed.
- Printed as:
  - aligned colinear with the scanning mirror travel direction.
  - 15 deg pitch to reduce warping.
- *Results*
  - Walls of ~25 microns could be printed.
    - These likely perfectly aligned with the pixels and thus should not be relied on.
  - Channels start fusing at ~ 0.2 mm
    - Fusing would likely begin earlier if not for the presence of existing channel.

Cuvettes

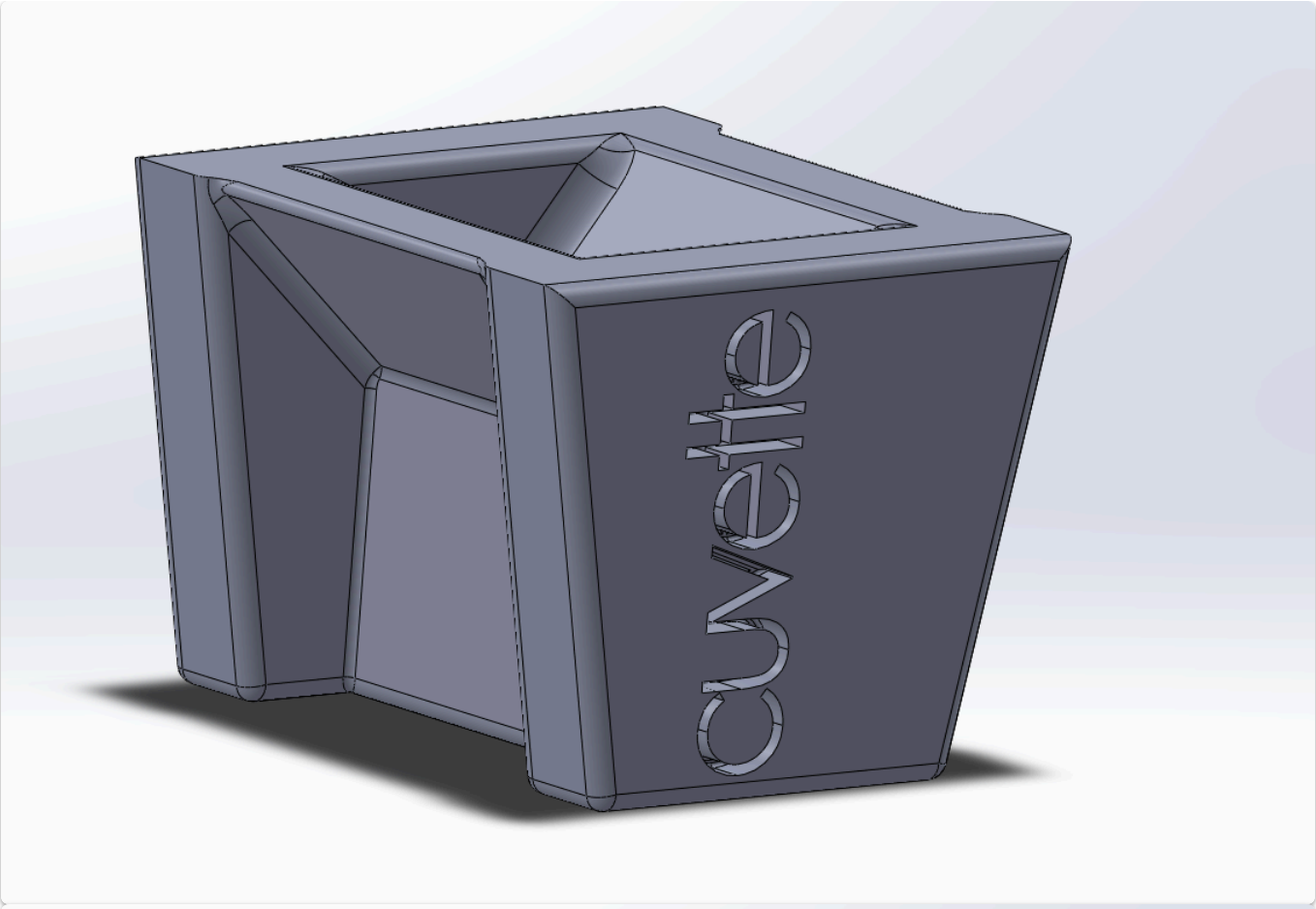

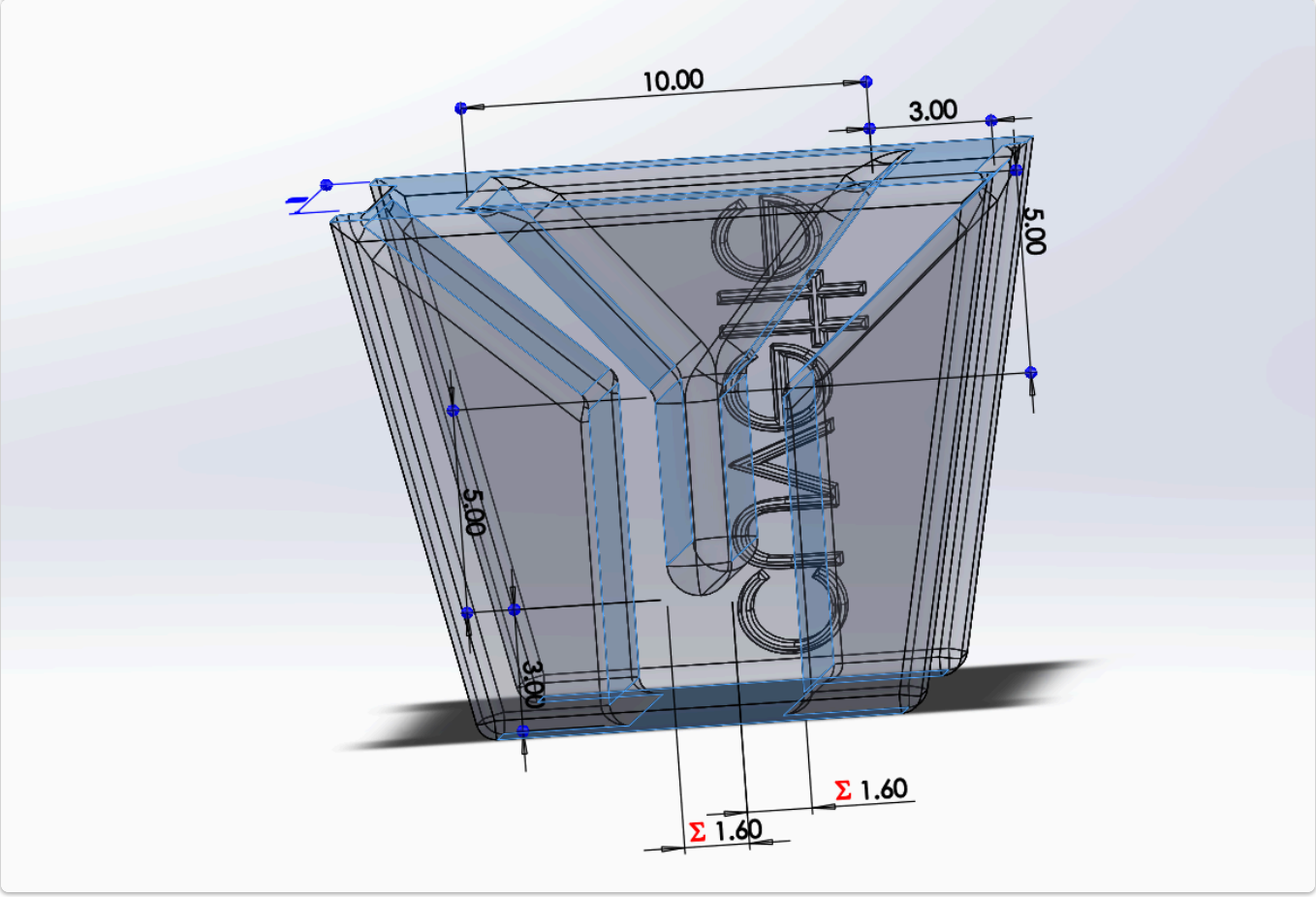

- Cuvettes grid producing with following parameters

    - Channel width: 0.2, 0.4, 0.8, 1.6
    - Channel wall width: 0.2, 0.4, 0.6, 0.8, 1.6
- *Results*:
    - Channels of 0.4 mm can be printed ~ reliably
    - Walls of all width print reliably.
        - Increase in wall width allows the channel to appear
        - Only 0.2 mm channel printed successfully was with 1.6mm walls

Future steps

- Channel widths >=0.4 mm. Hard lower limit at 0.2 mm.
    - Test printing closed channels (untested), since they might need to be wider.
        - Jake suggest:
            - Pumping EtOH through the channel before curing to clear it.
            - Speak with Mohamed (from Crick institute) later in the project
- Start the cuvette holder print in the morning.
- Test the cuvettes for electroporation:
  - C 0.4 W 0.4
  - C 0.4 W 0.8